WARNING - THIS DOCUMENT CONTAINS TECHNICAL DATA. EXPORT OF WHICH IS RESTRICTED BY THE EXPORT ADMINISTRATION REGULATIONS (EAR). DISCLOSURE TO FOREIGN PERSONS WITHOUT PRIOR U.S. GOVERNMENT APPROVAL IS PROHIBITED. VIOLATIONS OF THE EXPORT LAWS AND REGULATIONS ARE SUBJECT TO SEVERE CIVIL AND CRIMINAL PENALTIES.

NOTES:

1. DESIGNED TO BE INSTALLED BY LASER WELDING.
2. SHELL INTERFACE PER MIL-DTL-38999/23 SERIES III
3. CONTACT, ATMOSPHERIC SIDE: #8 BMA COAXIAL PER MIL-STD-348
4. CONTACT, HERMETIC SIDE: SMA PER MIL-STD-348
5. HERMETIC LEAK RATE: <= 1 X 10^{-9} CC/SEC He AT 1 ATM DIFFERENTIAL PRESSURE.
6. DIELECTRIC WITHSTANDING VOLTAGE - NO EVIDENCE OF BREAKDOWN OR FLASHOVER WHEN SUBJECTED TO 500 VAC RMS 60 Hz PER MIL-STD-1344, METHOD 3001. DURATION OF APPLICATION SHALL BE 1 SECOND MINIMUM.
7. INSULATION RESISTANCE - GREATER THAN 5,000 MEGOHMS AT 50±10% VDC AT 25°C IAW MIL-STD-1344, METHOD 3003.
8. ELECTRICAL PERFORMANCE
   IMPEDANCE: 50 OHMS NOMINAL
   OPERATIONAL FREQUENCY: UP TO 18 Ghz
   INSERTION LOSS: <= 1db @ 18Ghz
9. PART NUMBER SHALL BE IDENTIFIED BY BASE PART NUMBER, TRANSITION MATERIAL, SHELL SIZE/CONTACT ARRANGEMENT, KEY PATTERN AND SMA CONNECTOR DIELECTRIC MATERIAL.

   ORDER ACCORDING TO THE FOLLOWING

EXAMPLE: PAE38999S23-BMA-L- MMM - SS-CA - K - D

- SMA DIELECTRIC MATERIAL
  - -T = TPX
  - -P = PTFE (TEFLON)
- KEYWAY PATTERN
  - -N
  - -A
  - -B
  - -C
  - -D
  - -E
- SHELL SIZE AND CONTACT ARRANGEMENT
  - -11-80 (SHELL SIZE 11, 1 CONTACT)
  - -17-75 (SHELL SIZE 17, 2 CONTACTS)
  - -21-48 (SHELL SIZE 21, 4 CONTACTS)
  - -21-75 (SHELL SIZE 21, 4 CONTACTS)
  - -23-06 (SHELL SIZE 23, 6 CONTACTS)
  - -25-08 (SHELL SIZE 25, 8 CONTACTS)
- WELD TRANSITION MATERIAL
  - -AL2 = ALUMINUM 4032
  - -AL7 = ALUMINUM 4047
  - -SST = STAINLESS 304L
  - -TI = TITANIUM GRADE 2
- BASE PART NUMBER

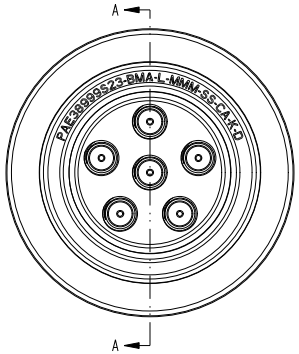

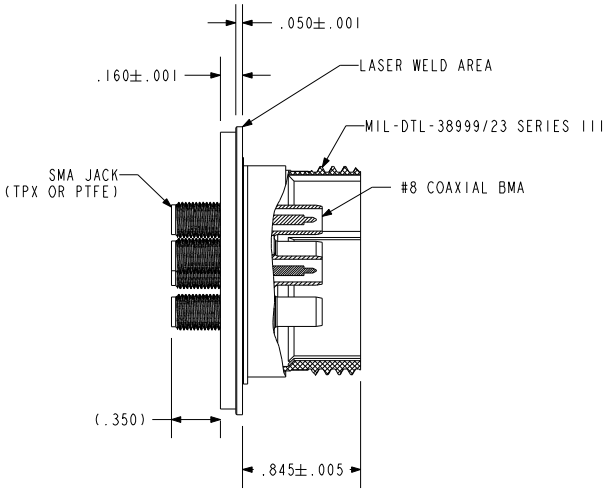

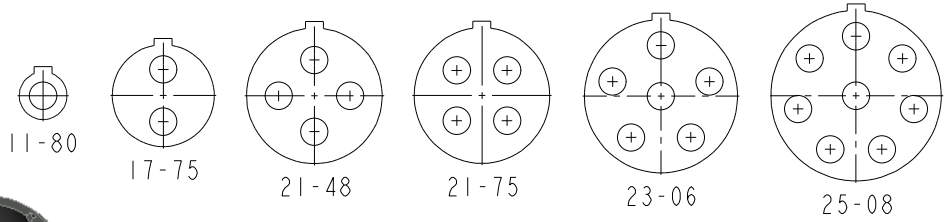

MATERIALS:

SHELL AND SMA BARREL: STAINLESS 304L (PASSIVATED)
FEEDTHRU INSERT: KOVAR ASTM-F15
BMA OUTER CONTACT: BERYLIUM COPPER ASTM-B196/197
BMA CENTER PIN: KOVAR ASTM-F15
INSULATOR: 7070 GLASS
TRANSITION RING OPTIONS:
- ALUMINUM 4032
- ALUMINUM 4047
- STAINLESS 304L
- TITANIUM GRADE 2

BMA PLATING:
Ni PLATE PER AMS-QQ-N-290, .000100/.000250 THICK
GOLD PLATE PER ASTM-B488, TYPE III CODE A, .000050/.000150

SEE PAGE 2 FOR RECOMENDED HOLE DETAIL.

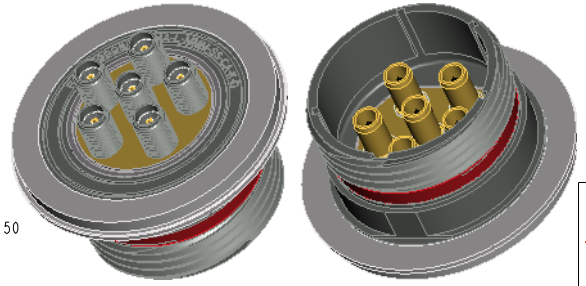

Pacific Aerospace & Electronics, Inc
434 Olds Station Rd. Wenatchee, Washington 98801
WWW.PACAERO.COM

TITLE: RECEPTICAL, 38999/23, SERIES III, SMA/BMA, LASER WELDABLE

THIRD ANGLE PROJECTION

J/C: EAR

VERSION	RELEASE DATE:		CAGE CODE:	SCALE:	SHEET:	DOCUMENT:
A. -	02-04-15	SALES DRAWING	64567	0.500	1 OF 2	0-PAE38999S23-BMA-L

INFORMATION HEREIN IS SUBJECT TO THE DATA RIGHTS AND EXPORT CONTROL LEGENDS ON SHEET 1.

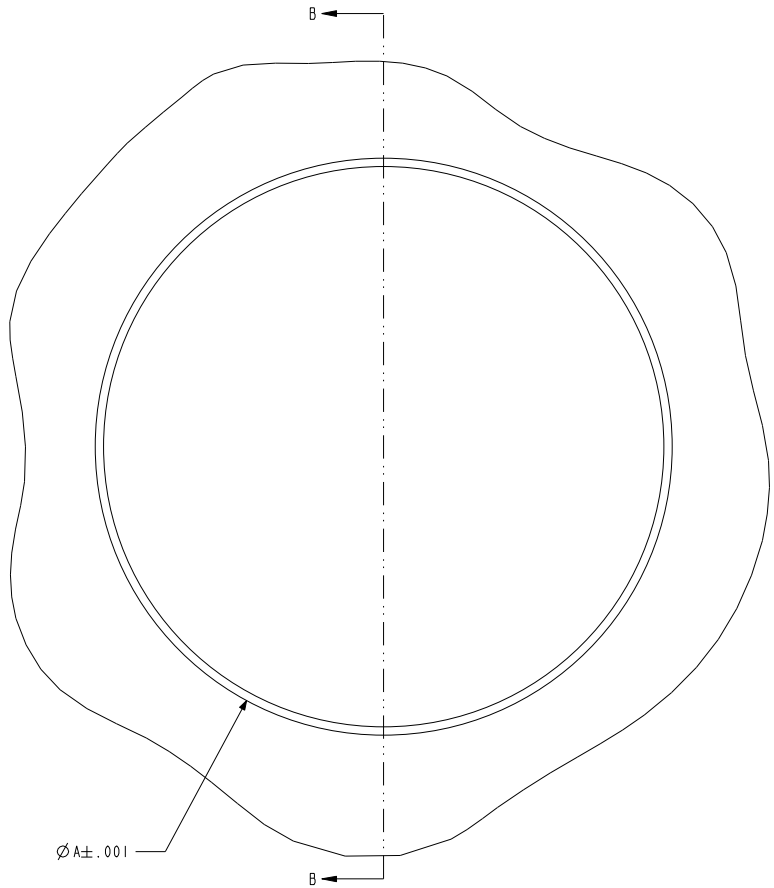

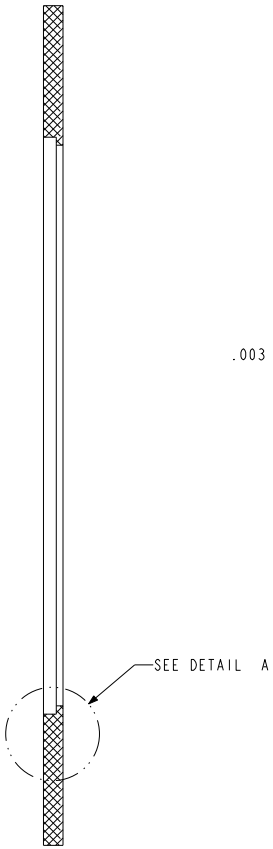

SECTION B-B

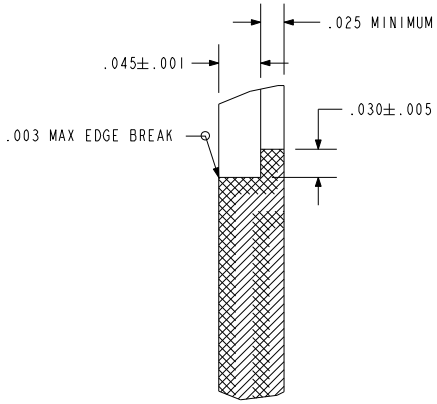

DETAIL A
SCALE 5.000

SHELL SIZE	A
11	1.255
17	1.629
21	1.940
23	2.066
25	2.192

RECOMENDED HOLE DETAIL

Pacific Aerospace & Electronics, Inc
434 Olds Station Rd. Wenatchee, Washington 98801
WWW.PACAERO.COM

TITLE:
RECEPTICAL, 38999/23, SERIES III, SMA/BMA, LASER WELDABLE

THIRD ANGLE PROJECTION

EAR

THE INFORMATION HEREIN CONTAINS PROPRIETARY RIGHTS OF PA&E AND SHALL NOT BE USED, REPRODUCED, OR DISCLOSED TO THIRD PARTIES FOR ANY PURPOSE EXCEPT AS SPECIFICALLY AUTHORIZED IN WRITING BY PA&E

CAGE CODE: 64567

SHEET: 2 OF 2

DOCUMENT: 0-PAE38999S23-BMA-L