WARNING - THIS DOCUMENT CONTAINS TECHNICAL DATA, EXPORT OF WHICH IS RESTRICTED BY THE EXPORT ADMINISTRATION REGULATIONS (EAR). DISCLOSURE TO FOREIGN PERSONS WITHOUT PRIOR U.S. GOVERNMENT APPROVAL IS PROHIBITED. VIOLATIONS OF THE EXPORT LAWS AND REGULATIONS ARE SUBJECT TO SEVERE CIVIL AND CRIMINAL PENALTIES.

NOTES:

1. HOLES AND INTERFACE DIMENSIONS PER MIL-PRF-83513/2.
2. MATEABLE WITH CONNECTORS MANUFACTURED PER MIL-PRF-83513/1 AND MIL-PRF-83513/3.
3. DESIGNED TO BE LASER WELDED TO AN ALUMINUM HOUSING.
4. WIRE BOND FLATS SHALL BE .015 MIN LONG, .010 MIN WIDE, AND .007 MIN THICK.
5. HERMETIC LEAK RATE: LESS THAN OR EQUAL TO $1X10^{-9}$ CC/SEC He AT 1 ATM DIFFERENTIAL PRESSURE.
6. ELECTRICAL REQUIREMENTS:

   INSULATION RESISTANCE: GREATER THAN 5,000 MEGOHMS AT 500±10% VDC AT 25°C WHEN TESTED IAW MIL-STD-1344, METHOD 3003.

   DIELECTRIC WITHSTANDING VOLTAGE: MUST SHOW NO EVIDENCE OF BREAKDOWN OR FLASHOVER WHEN SUBJECTED TO 600 VAC RMS 60Hz IAW MIL-STD-1344, METHOD 3001. DURATION OF APPLICATION TO BE 1 SEC MIN.

7. MATERIALS:

   WELD FLANGE: 4XXX SERIES ALUMINUM.
   CONTACTS: BERYLLIUM-COPPER IAW ASTM B196 OR ASTM B197.
   INSULATORS: KRYOFLEX 313 PROPRIETARY POLYCRYSTALLINE CERAMIC.
   INTERFACIAL SEAL: FLUOROSILICONE RUBBER IAW MIL-R-25988, CLASS 1, TYPE II, GRADE 60.
   HELICAL INSERTS: 300-SERIES STAINLESS STEEL.

8. FINISH:
   CONTACTS: ELECTROLYTIC NICKEL PLATE IAW QQ-N-290, .000100/.000200 THICK.
   GOLD PLATE IAW ASTM B488, TYPE 1, CODE A, .000050/.000150 THICK.

   SHELL: CHEMICAL CONVERSION COAT IAW MIL-C-5541, CLASS 1A.

9. ORDERING INFORMATION:

   PLEASE SPECIFY ACCORDING TO THE FOLLOWING

   92924 - X - L

   BASE PART NUMBER TO ORDER

   PIN COUNT (9, 15, 21 25, 31, OR 37)

   SPECIFY L FOR LOCKING HELICAL INSERT
   LEAVE BLANK FOR NON-LOCKING HELICAL INSERT

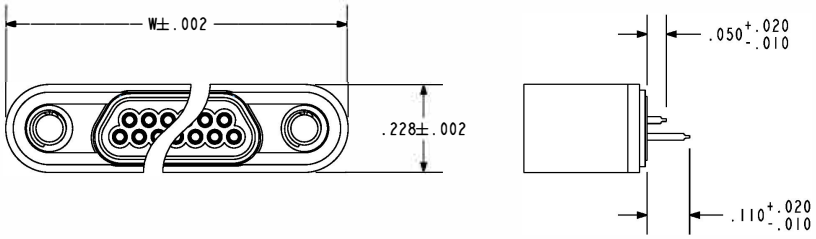

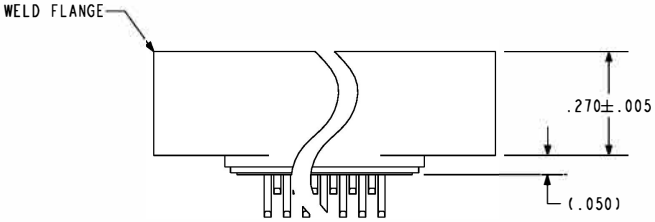

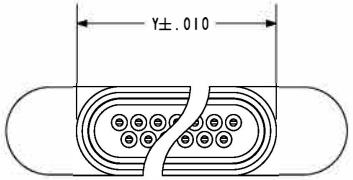

TABLE 1			
NUMBER OF CONTACTS	W	Y	Z
9	.792	.422	.795
15	.942	.572	.945
21	1.092	.722	1.095
25	1.192	.822	1.195
31	1.342	.972	1.345
37	1.492	1.122	1.495

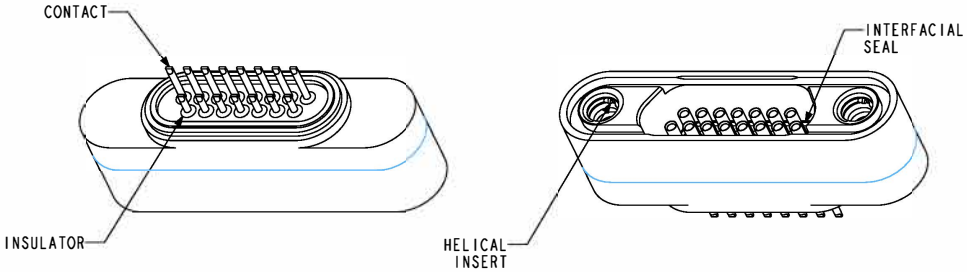

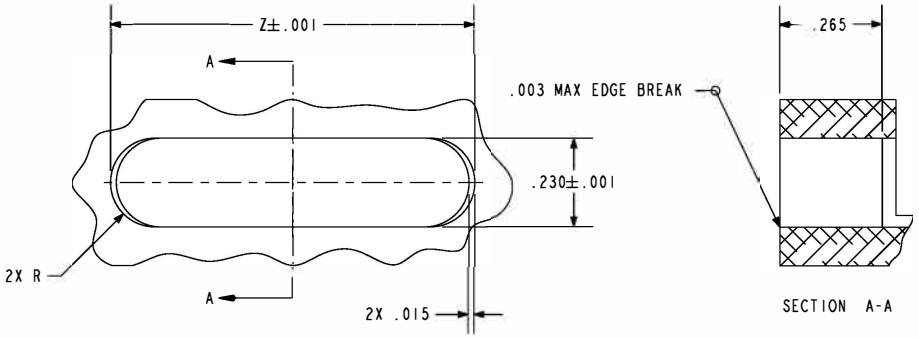

PA&E The Hermetic Assurance
A Division of HERMETIC SOLUTIONS Leading Technology
434 Olds Station Rd. Wenatchee WA 98801
WWW.PACAERO.COM

TITLE: CONNECTOR, MICRO-D, LOW-PROFILE, AL-COMPATIBLE

THIRD ANGLE PROJECTION

CAGE CODE: 64567

VERSION	RELEASE DATE:		SHEET:	DOCUMENT:
D.0	11-26-12	SALES DRAWING	1 OF 1	0-92924